EE 568 - Selected Topics on Electrical Machines
Project #1

Muhammet Kamer Taha Genç - 2234748

Introduction

Assumptions

The analytical derivation of the motor's torque and inductance profiles relies on the following idealized assumptions regarding the magnetic circuit:

- **Ideal Magnetic Material:** The stator and rotor cores are assumed to have infinite permeability and zero magnetic saturation, meaning the reluctance of the iron path is zero.
- **Ideal Flux Path:** Magnetic fringing at the pole edges and flux leakage outside the primary circuit are neglected. The flux is assumed to travel uniformly and directly straight across the air gaps.
- **Sinusoidal Variation:** The magnetic flux and air gap permeance are assumed to follow a pure sinusoidal variation with respect to the rotor angle. This idealized wave peaks between the fully aligned position (0°), corresponding to a 0.5 mm air gap, and the fully unaligned position (90°), corresponding to a 2.5 mm air gap.

Analytical Calculations

Reluctance

The general formula for the reluctance of the air gap is given by:

$$R = \frac{2*l}{\mu_0 A}$$

Where:

- l: Air gap length
- A: Effective area
- μ0: Permeability of free space (air)

The effective area is calculated as:

$$A = 2\pi r \frac{\theta}{360} l$$

Where θ is the angle that corresponds to the 15 mm width of the rotor, which is 77.36 degrees.

Minimum and Maximum Reluctance

Using the minimum air gap length, the minimum reluctance is:

$$R_{min} = \frac{2*l_{min}}{\mu_0 A} = 1,965 * 10^6 \ 1/H$$

And using the maximum air gap length, the maximum reluctance is:

$$R_{max} = \frac{2*l_{max}}{\mu_0 A} = 9,824 * 10^6 \ 1/H$$

Inductance

The general formula for inductance is given by:

$$L = \frac{N^2}{R}$$

Using the reluctance values calculated previously, the maximum and minimum inductances are:

$$L_{max} = \frac{300^2}{R_{min}} = 45,8 \ mH$$

$$L_{min} = \frac{300^2}{R_{max}} = 9.2 \ mH$$

Sinusoidal Variation

Assuming a sinusoidal variation for the inductance profile, the general equation is:

$$L(\theta) = L_0 + L_1 cos(2\theta)$$

Applying the boundary conditions where the aligned position is $L(0) = L_{max}$ and the unaligned position is $L(90) = L_{min}$ the final inductance equation becomes:

$$L(\theta) = 27.5 + 18.3cos(2\theta)$$

Torque

The instantaneous mechanical torque produced by the motor is calculated based on the rate of change of inductance with respect to the rotor position:

$$T = \frac{1}{2} I^2 \frac{dL(\theta)}{d\theta}$$

By differentiating the previously established inductance profile, $L(\theta) = 27.5 + 18.3cos(2\theta)$ mH, and substituting the operating current (I=2.5 A), the final analytical torque equation is derived:

$$T(\theta) = -0.114 * sin(2\theta)$$

Where angle θ is assumed 0 when the air gap is 0.5 mm.

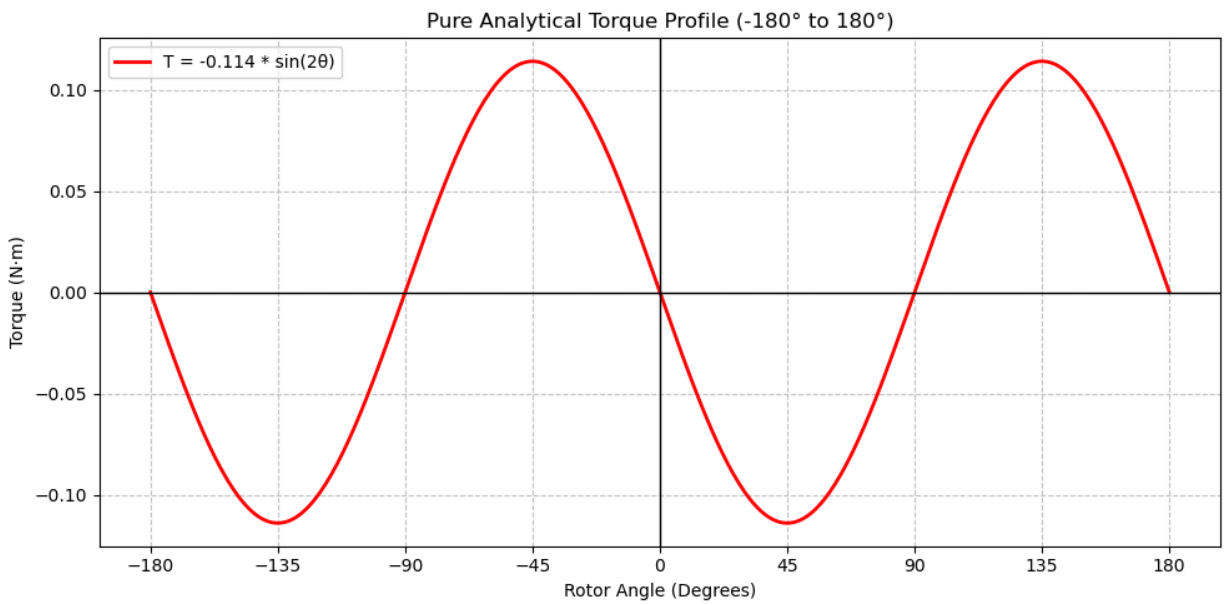

Limitations of the Ideal Analytical Model

Finite Permeability and Magnetic Saturation

The ideal model assumes the stator and rotor cores possess infinite permeability. In reality, magnetic materials like M-19 steel have finite permeability and are subject to saturation. To calculate this analytically without FEA, an iterative approach is required: an initial flux value is assumed, the corresponding operating point on the material's B-H curve is located, and the iron reluctances are updated. This loop is repeated until the mathematical solution converges.

Non-Homogeneous Flux and Leakage

The theoretical model assumes that magnetic flux travels uniformly through the core in a single, perfectly contained loop. In a physical motor, flux leaks across the air spaces between poles and concentrates heavily at sharp inner corners (flux crowding). To analytically resolve this without software, an advanced Magnetic Equivalent Circuit (MEC) must be constructed. This

MEC divides the motor into a complex, interconnected grid of magnetic reluctances—similar to a large network of electrical resistors—which must be solved simultaneously using matrix algebra to determine the true flux distribution.

Fringing Flux and Inductance Correction

At the air gap, the magnetic field lines "bulge" outward rather than traveling straight across. This phenomenon, known as fringing flux, effectively increases the cross-sectional area of the air gap. Because reluctance is inversely proportional to area, fringing decreases the total air gap reluctance, which in turn increases the calculated inductance. To account for this analytically, various empirical models are utilized. For instance, as detailed in Kazimierczuk's [1] work on high-frequency magnetic components, the effective geometry can be scaled using a fringing factor F, given by:

$$F = \frac{(a + l_{gap}) * (b + l_{gap})}{a * b}$$

Where a and b represent the lengths of each side of the rectangular cross-section of the magnetic core.

Finite Element Analysis

Linear Model

In this stage of the project, the motor geometry was analyzed using a linear material model to establish a baseline for comparison with theoretical results. The physical dimensions and coordinates of the motor were precisely determined through a preliminary 3D modeling phase in FreeCAD, ensuring that the FEA geometry accurately reflects the intended design. For the simulation, the stator and rotor were assigned M-19 steel properties, which were idealized as a linear material with a constant relative permeability of 4416. To streamline data collection, a custom Python script was utilized to automate the solver. This script allowed for high-fidelity analysis at specific critical rotor positions (0°, 45°, and 90°) while also performing a continuous torque and inductance sweep across the full mechanical range from −90° to 90°.

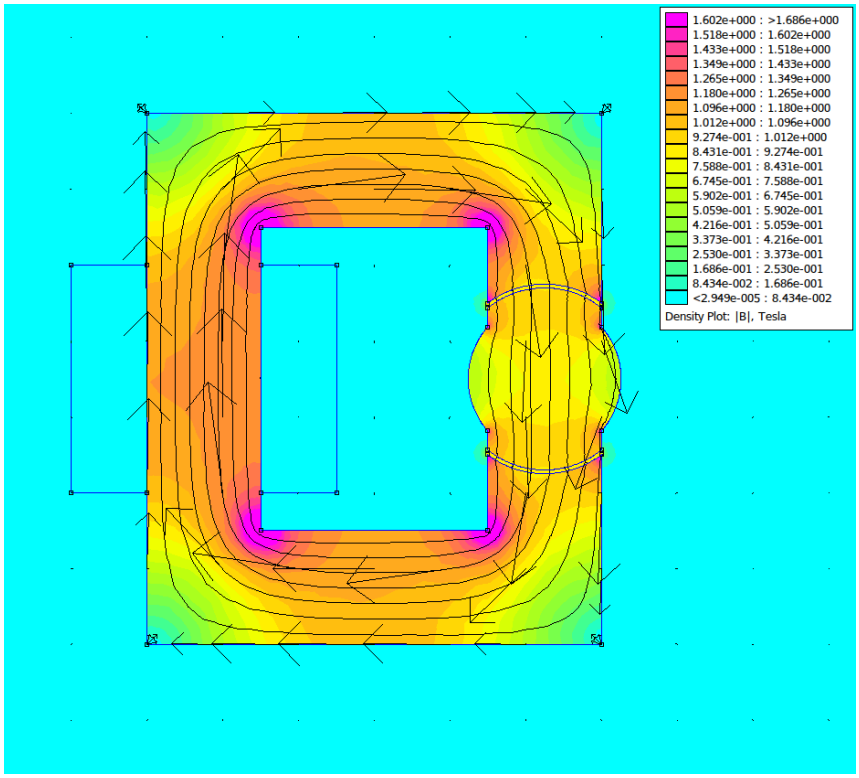

Figure 1: Flux Density Vectors for the Reluctance Machine at 0°

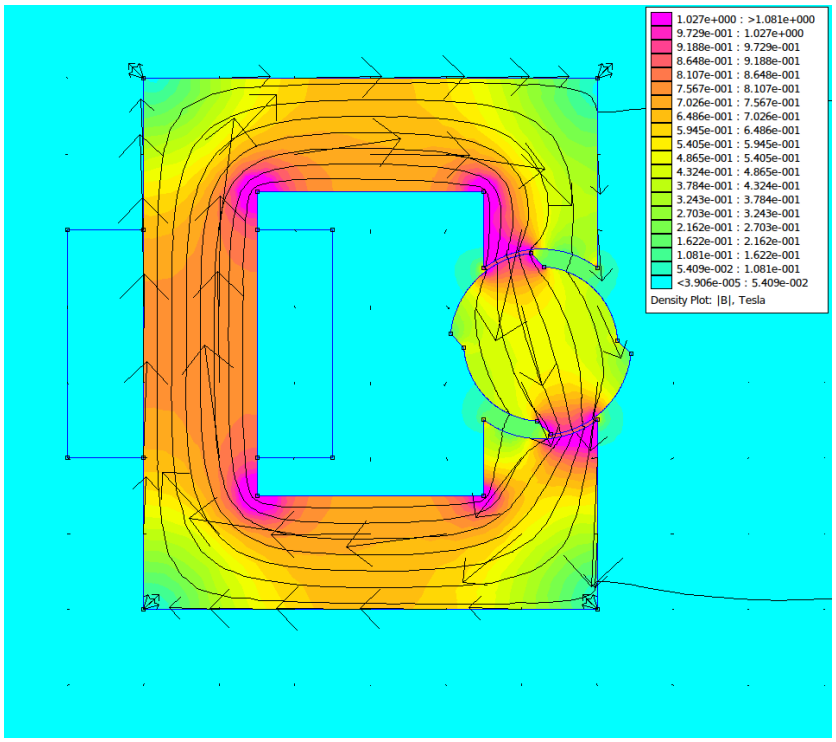

Figure 2: Flux Density Vectors for the Reluctance Machine 45°

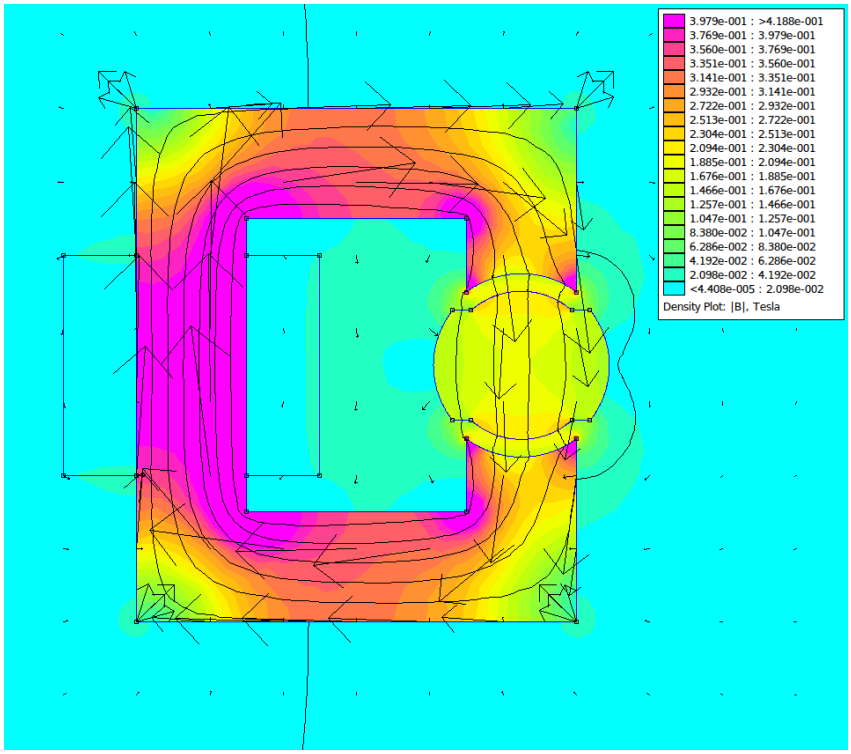

Figure 3: Flux Density Vectors for the Reluctance Machine 90°

Table 1: Inductance & Stored Energy with Changing Angles

	0°	45°	90°
Inductance (H)	0.053	0.035	0.017
Stored Energy (Joules)	0.166	0.109	0.058

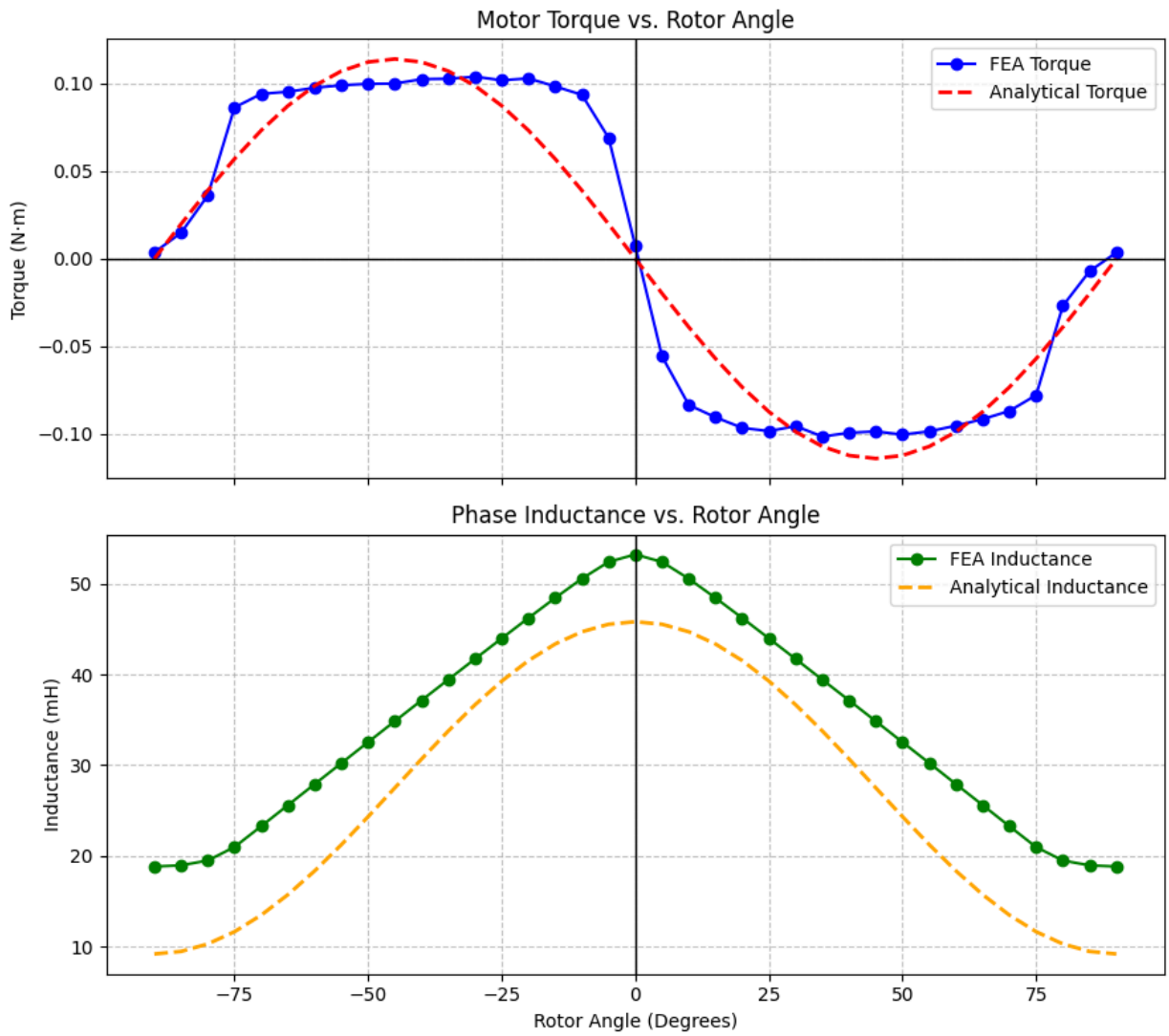

Graph 1: Torque & Inductance Profile of Both Analytical & FEMM Calculations

A comparison of the results reveals that the analytical inductance values are consistently lower than those obtained through FEMM. This discrepancy is primarily attributed to the simplification of neglecting **fringing flux** in the theoretical model. In the physical system, fringing effects effectively increase the magnetic cross-sectional area of the air gap; by ignoring these paths in the analytical calculations, the total inductance is underestimated.

Furthermore, while the torque profiles exhibit a similar overall trend, minor variations in the curve shape are evident. These differences arise from the **sinusoidal assumption** used in the analytical derivation. While the mathematical model assumes a perfect sine wave for the change in inductance, the FEA solver captures the more complex, non-linear rate of change produced by the actual geometric overlap of the rotor and stator poles, resulting in the slight profile shifts observed in the final plots.

Non-Linear Model

In the non-linear modeling phase, the same automated Python scripts developed for the linear analysis were utilized to ensure a direct and controlled comparison between the two models. The primary modification involved the material assignment for the electromagnetic cores; rather than employing a constant relative permeability, the properties for **M-19 steel** were sourced directly from the built-in **FEMM material library**. By implementing this **non-linear B-H curve**, the simulation accounts for the realistic saturation of the steel as magnetic flux density increases.

This transition from an ideal to a saturable model is critical for capturing the physical limitations of the magnetic circuit. Specifically, it allows for the observation of how magnetic saturation reduces the incremental change in flux linkage as the poles align. This leads to a more realistic torque profile where the idealized plateau observed in the linear model "collapses" due to the steel reaching its maximum flux-carrying capacity, resulting in a lower peak torque and a significantly different curve shape.

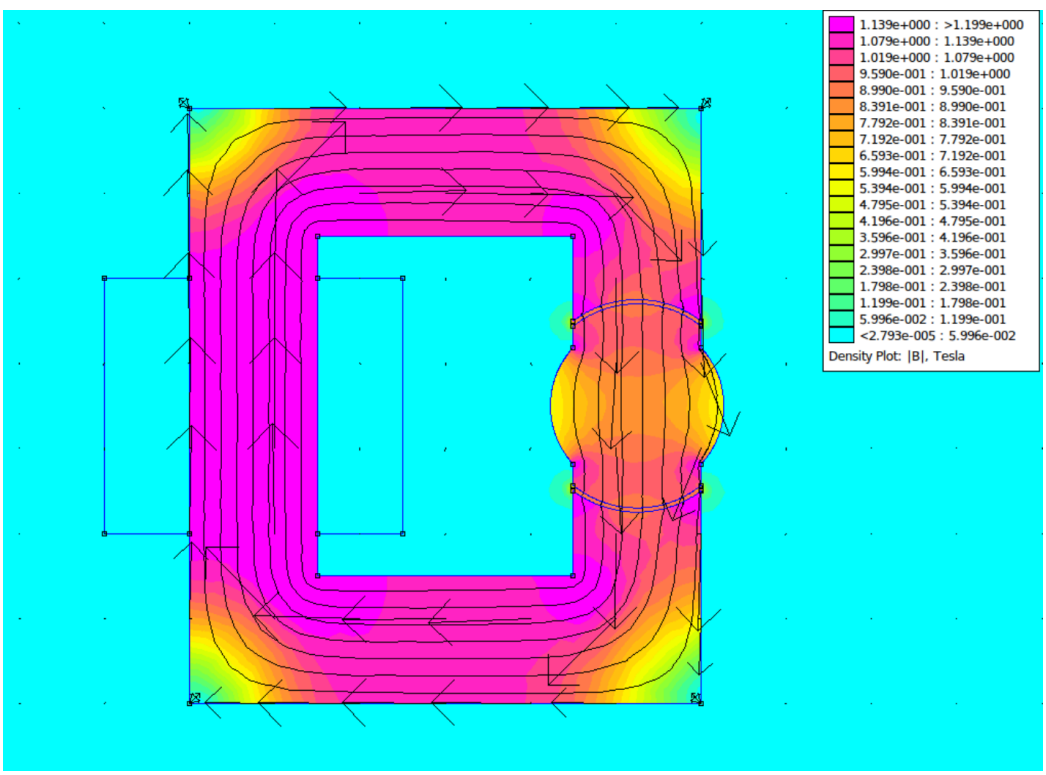

Figure 4: Flux Density Vectors for the Reluctance Machine at 0° (non-linear)

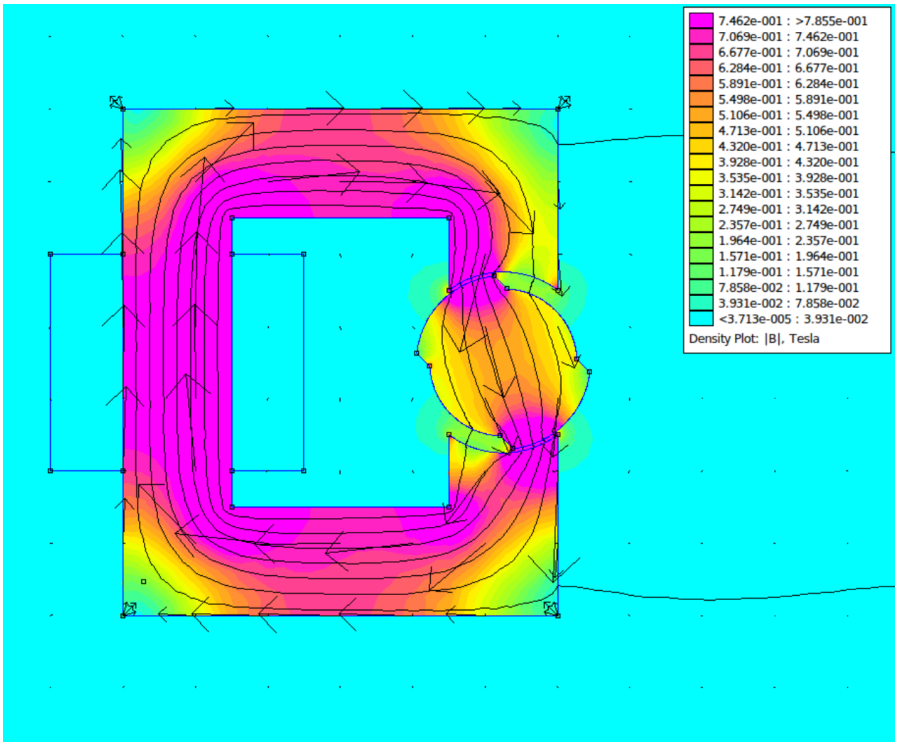

Figure 5: Flux Density Vectors for the Reluctance Machine at 45° (non-linear)

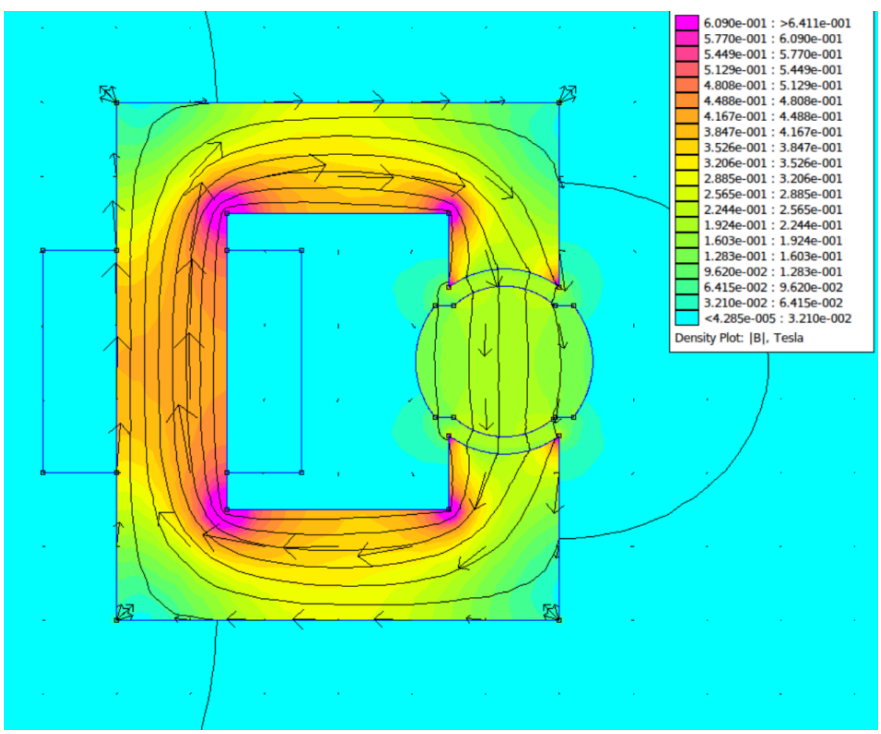

Figure 6: Flux Density Vectors for the Reluctance Machine at 90° (non-linear)

Table 2: Inductance & Stored Energy with Changing Angles (Non-Linear)

	0°	45°	90°
Inductance (H)	0.053	0.035	0.017
Stored Energy (Joules)	0.166	0.109	0.058

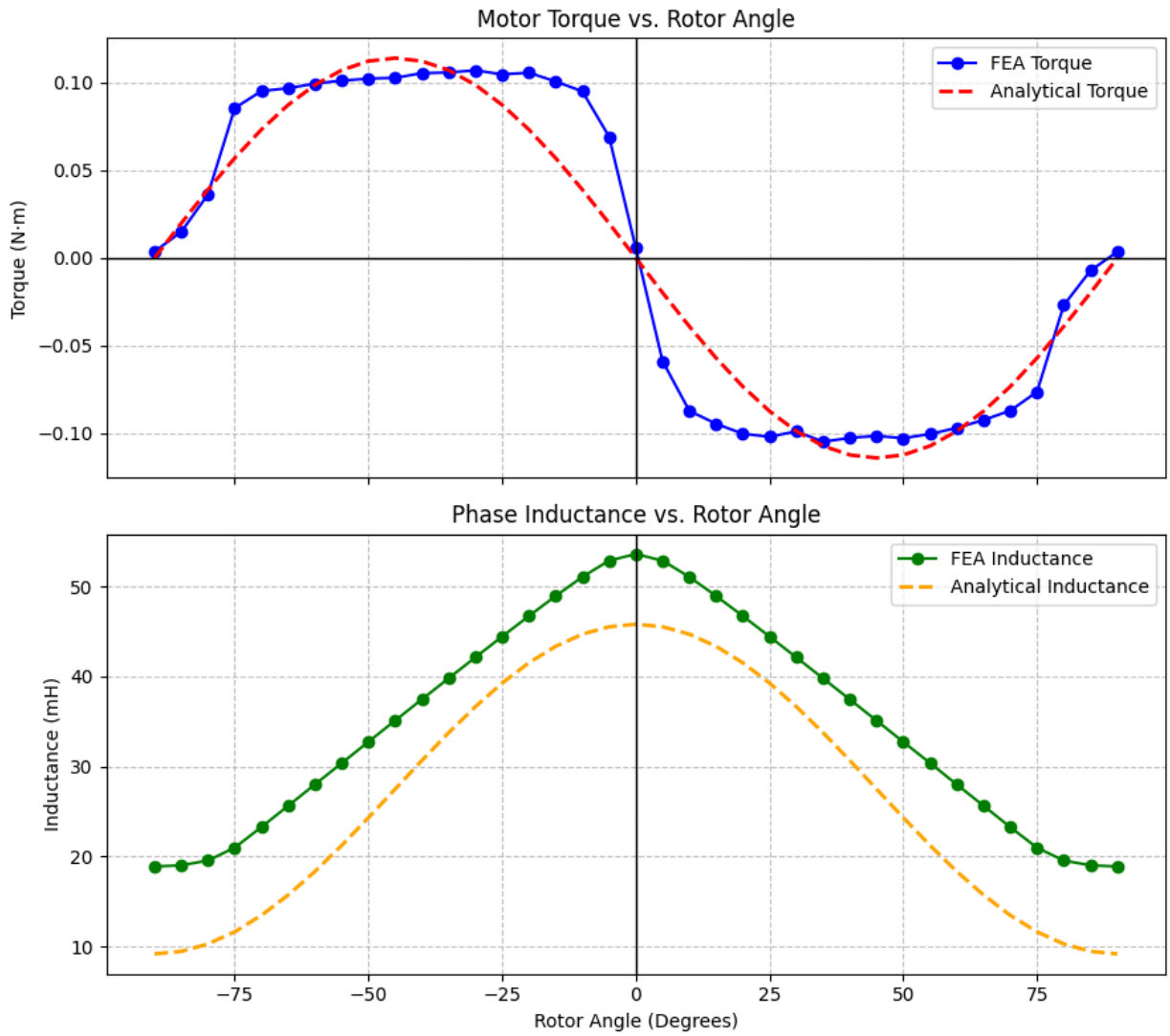

Graph 2: Torque & Inductance Profile of Both Analytical & FEMM Calculations (Non-linear)

The fact that the linear and non-linear FEA results are identical indicates that the magnetic flux density (B) within the motor remains entirely within the **linear region of the M-19 B-H curve**. Because the magnetomotive force generated by the coil current and turn count is not high enough to push the steel past its saturation knee, the material continues to behave with constant permeability. In this unsaturated state, the non-linear solver effectively operates on a fixed slope, leading to results that converge perfectly with the idealized linear model. This

confirms that, under these specific operating conditions, the motor is not being limited by the physical constraints of the magnetic material.

To see the effect of the saturation the reluctance machine is excited with 10 A and the following torque and inductance profile is obtained.

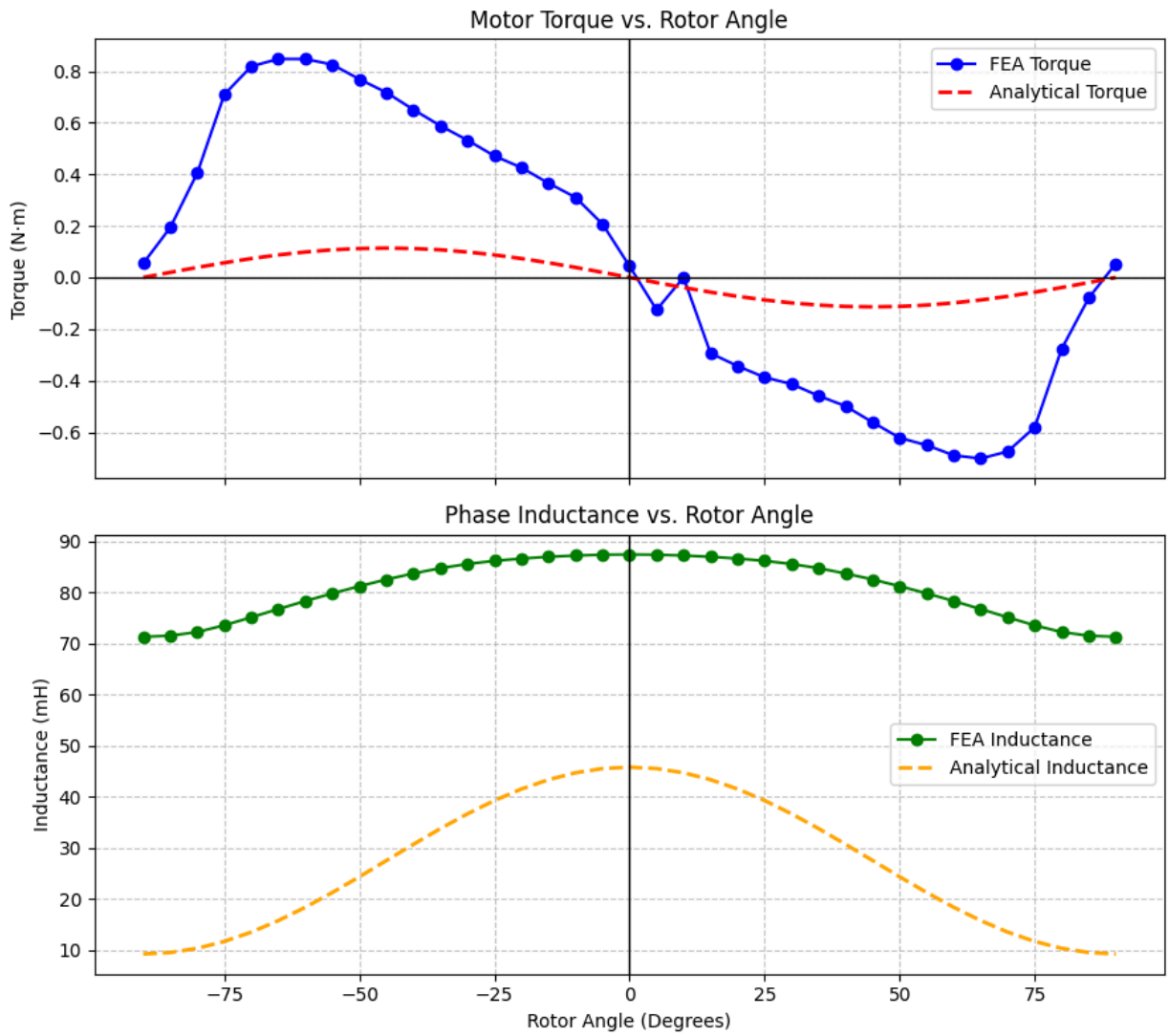

Graph 3: Torque & Inductance Profile of Both Analytical & FEMM Calculations (Non-linear with 10 A)

From graph 3 it can be seen that inductance saturates sooner compared to 2.5 A excitation when moved from -90 degrees to 0 degrees. This creates the torque peak at around 60 degrees.

Control Method

Because the reluctance torque of the motor is proportional to the square of the phase current, the direction of the applied torque is entirely independent of the current's polarity. Consequently, continuous unidirectional rotation—such as counter-clockwise motion—can be achieved using a simple, unipolar switched DC drive. To sustain this rotation, the control system must energize the stator phase exclusively during the specific rotor angles where the natural reluctance torque acts in the desired CCW direction. As the rotor passes the aligned position and enters a region where the torque profile naturally reverses (which would produce opposing clockwise torque), the phase current is actively switched to zero. During this unenergized window, the rotor relies on its accumulated mechanical inertia to coast against friction and bridge the magnetic "dead zone," carrying it safely to the next angular position where positive CCW torque can once again be applied.